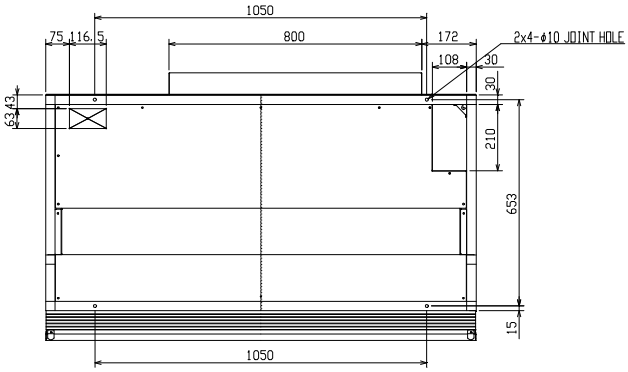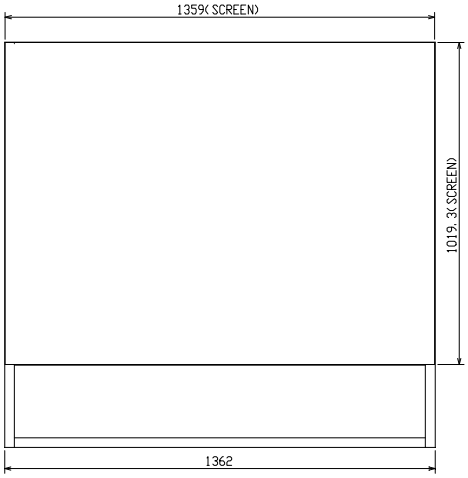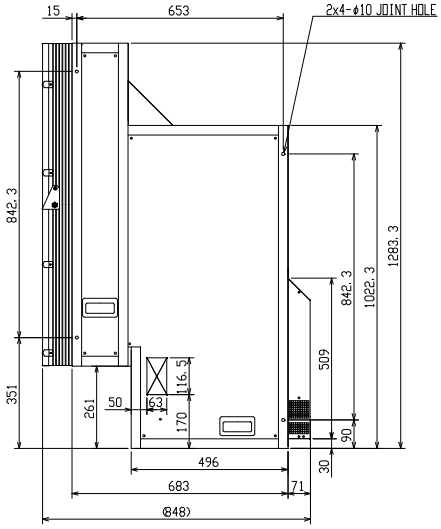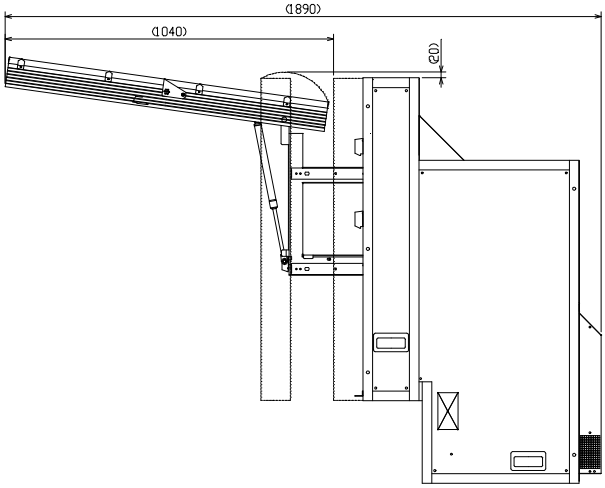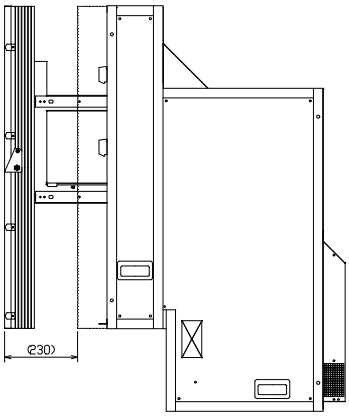External dimensions (Unit: mm)